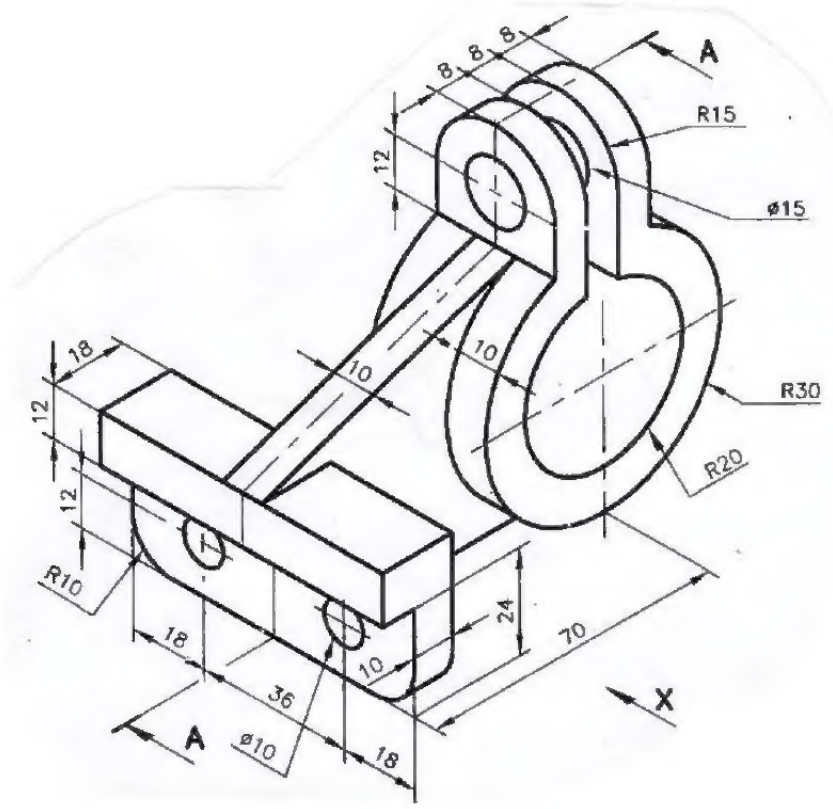
A
8
8
8
R15
12
ø15
18
10
10
R30
12
12
R20
R10
24
70
18
10
36
X
A
ø10
18

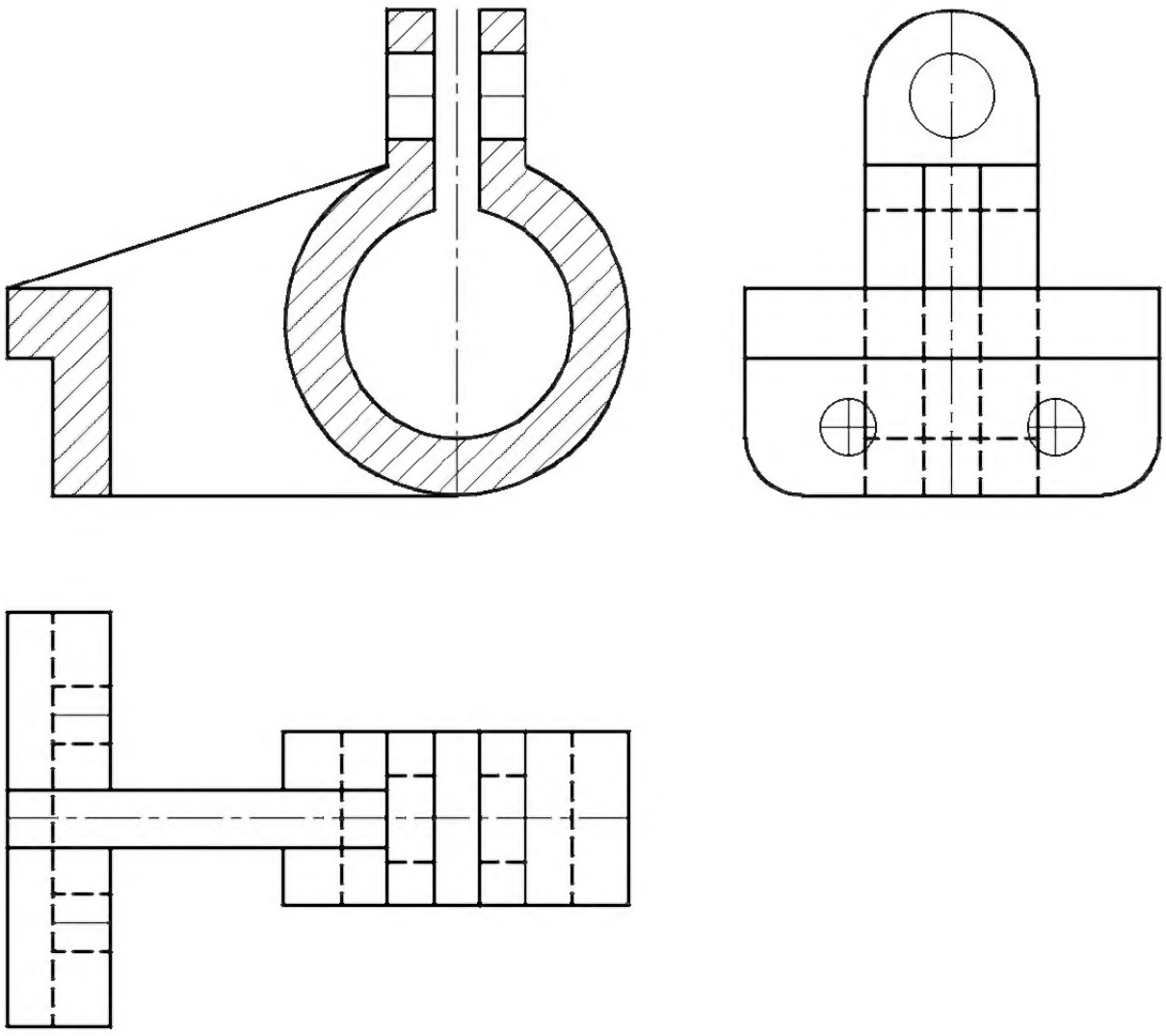

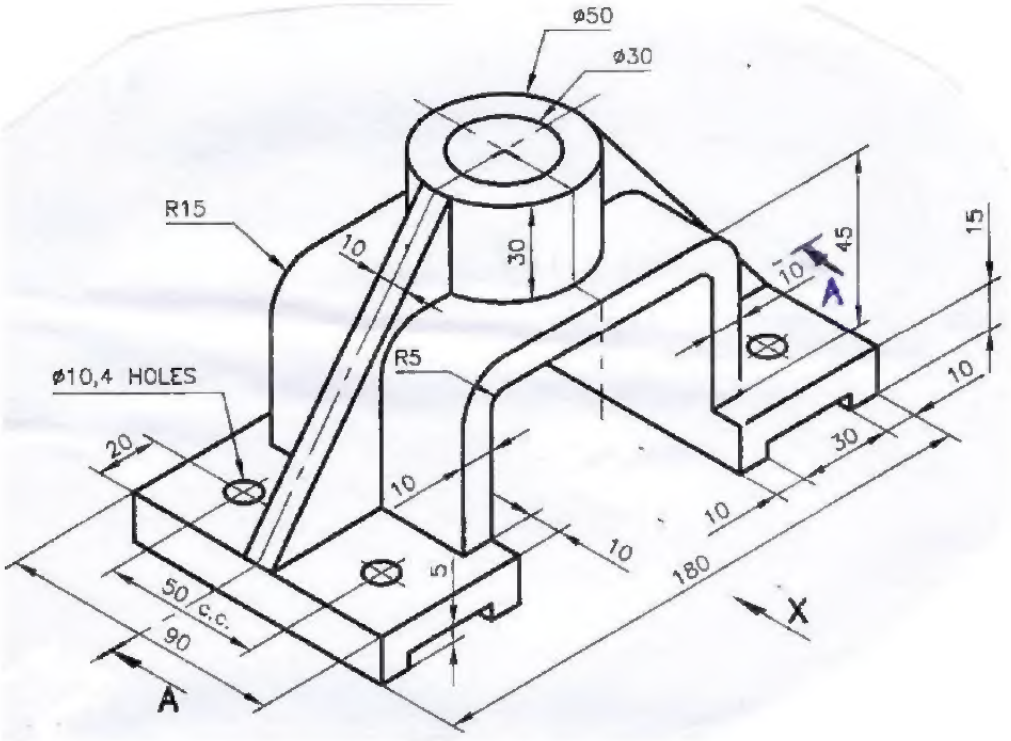
ø50
ø30
R15
10
30
45
15
10
A
ø10,4 HOLES
R5
20
10
10
10
30
10
5
50 c.c.
90
180
A
X

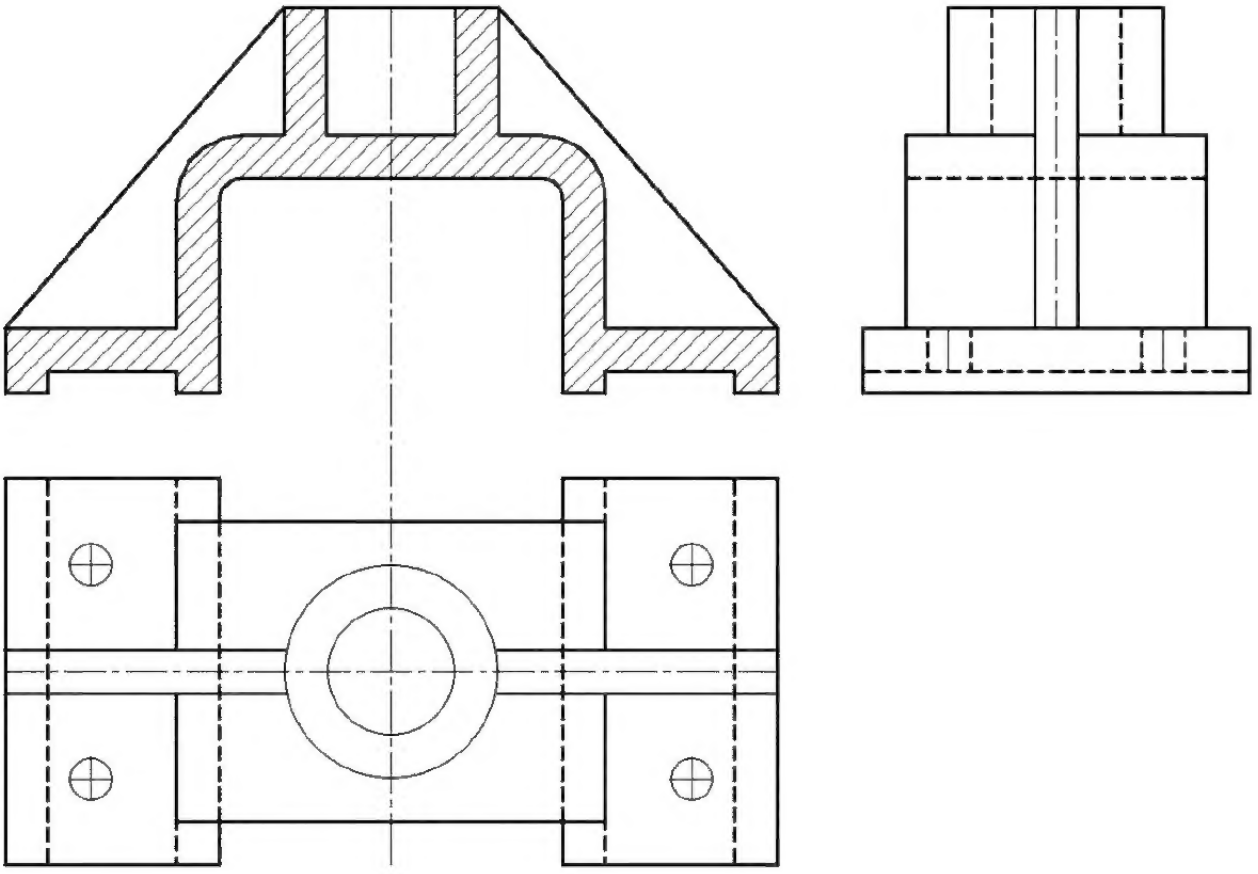

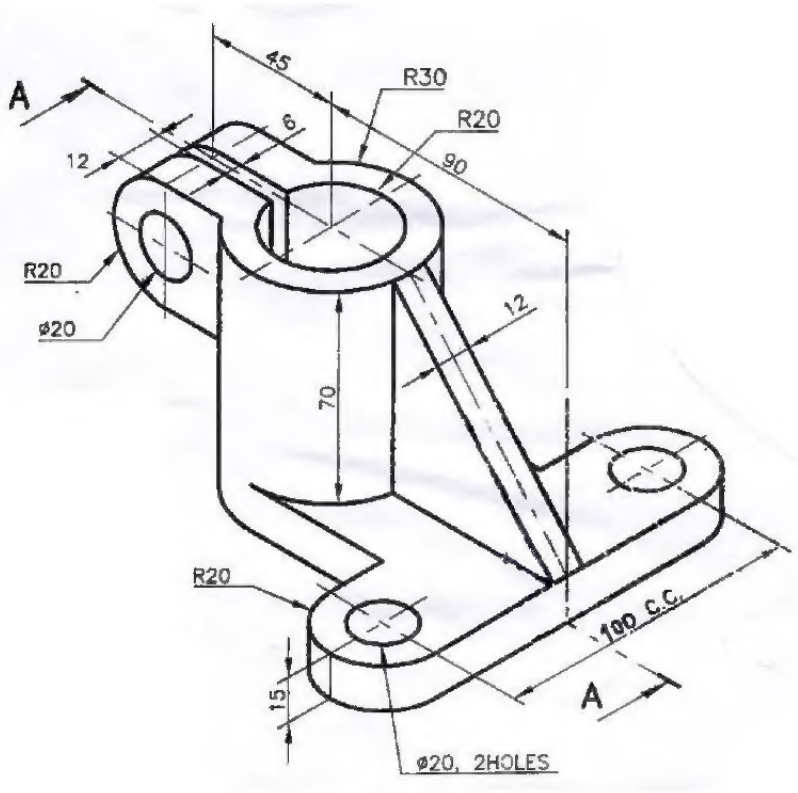
45
R30
R20
A
6
12
90
R20
ø20
12
70
R20
100 C.C.
A
15
ø20, 2HOLES

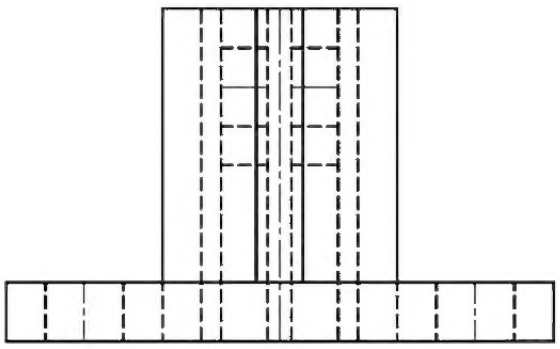

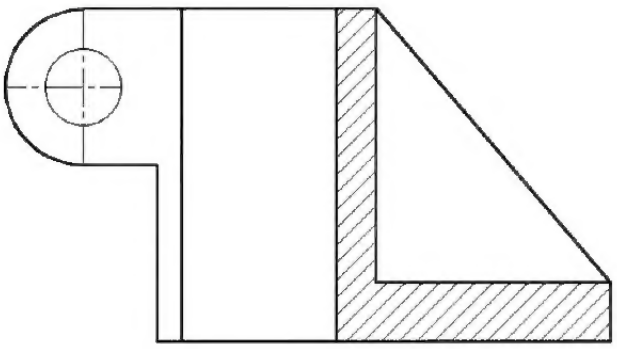

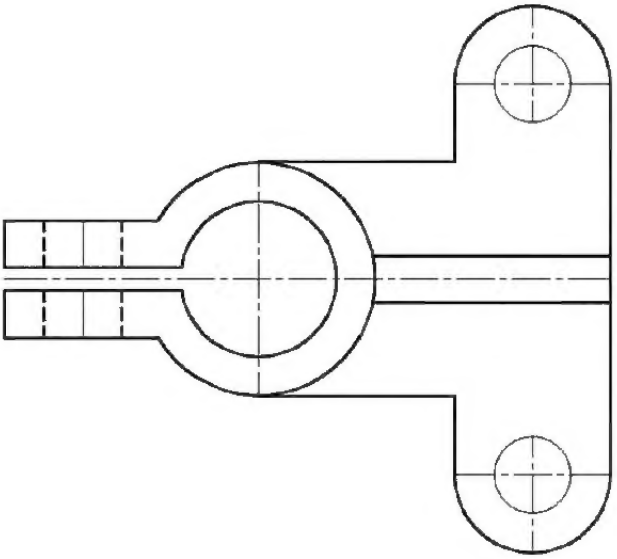

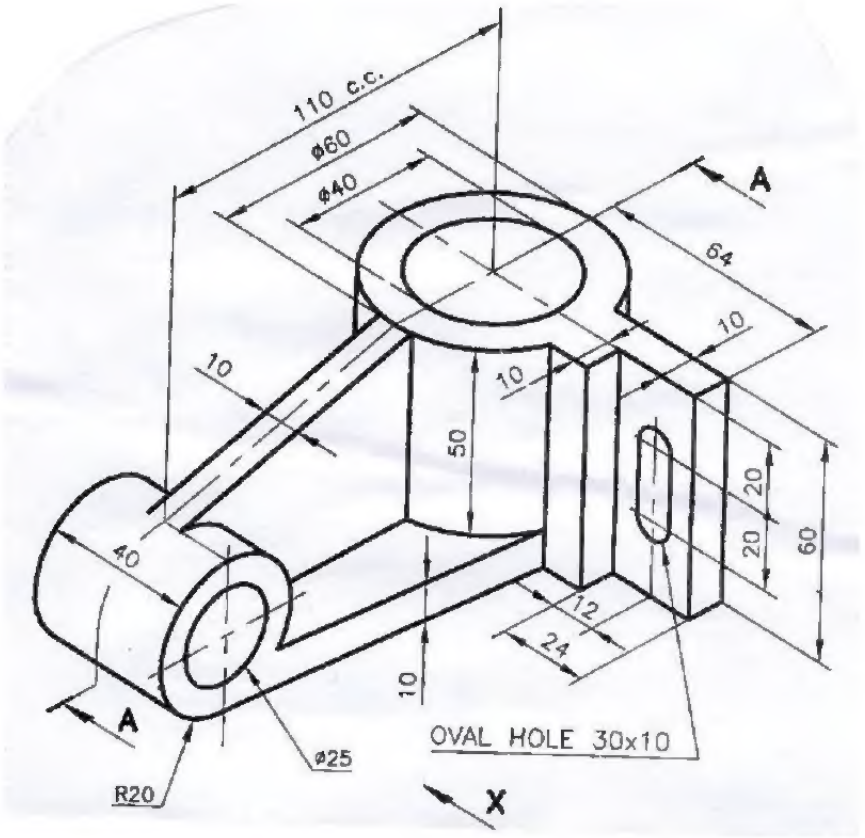
110 c.c.
ø60
ø40
A
64
10
10
10
50
20
20
60
40
12
24
10
A
R20
ø25
OVAL HOLE 30x10
X

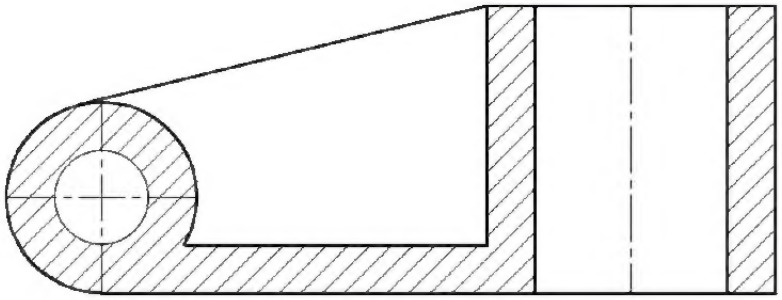

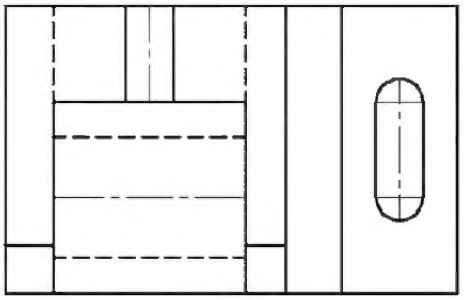

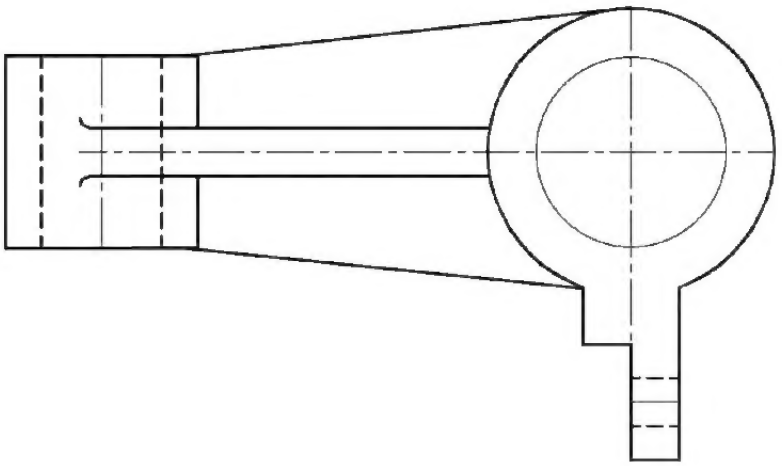

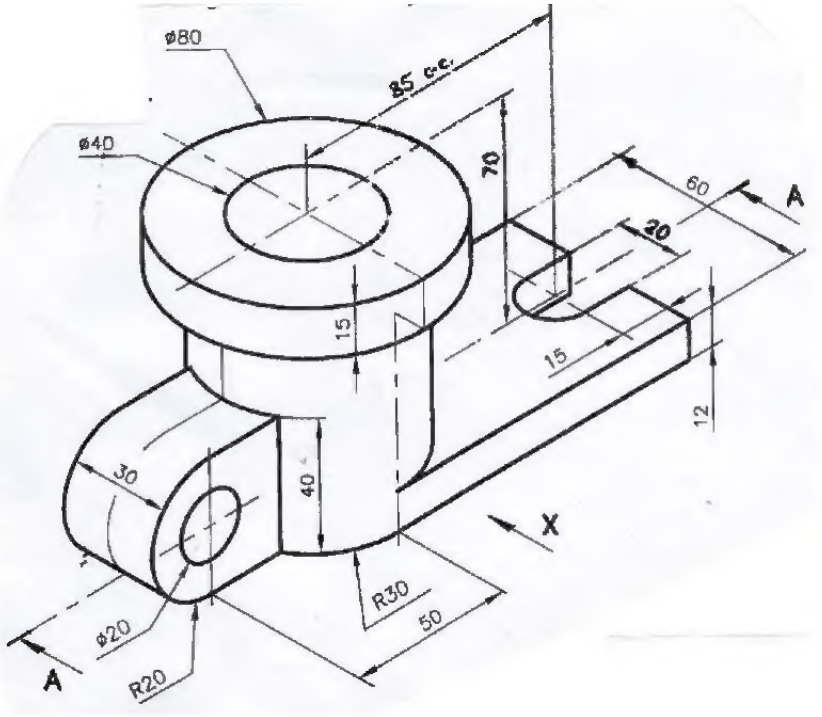
ø80
85 c-c
ø40
70
60
A
30
15
15
12
30
40
X
R30
50
ø20
R20
A

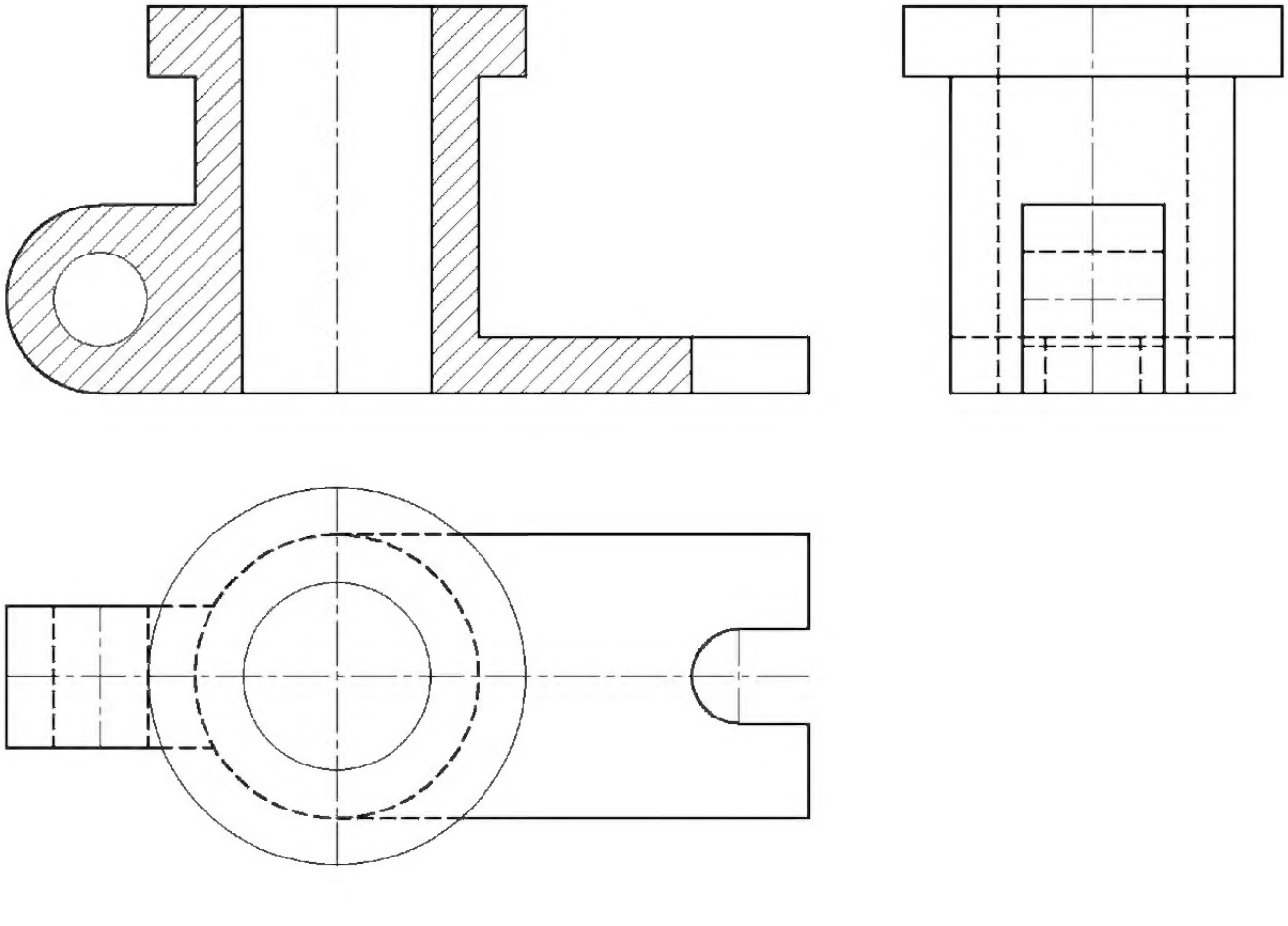

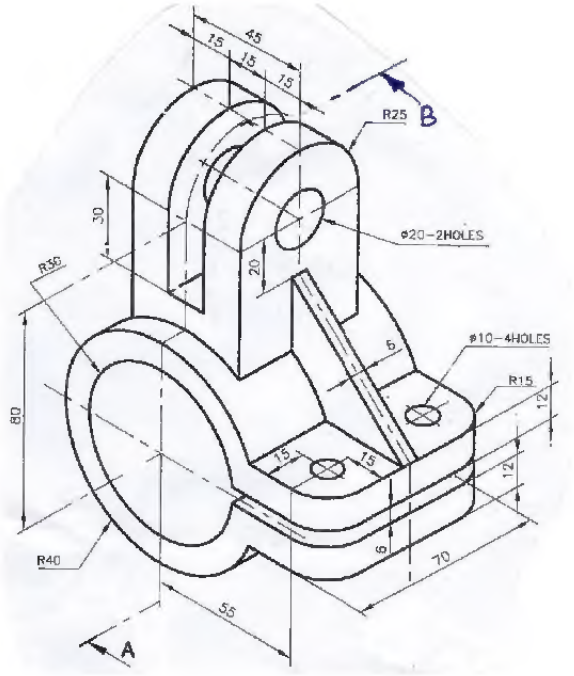
45
15
15
15
R25
B
30
ø20–2HOLES
20
R30
ø10–4HOLES
6
R15
12
80
15
15
12
6
70
R40
55
A

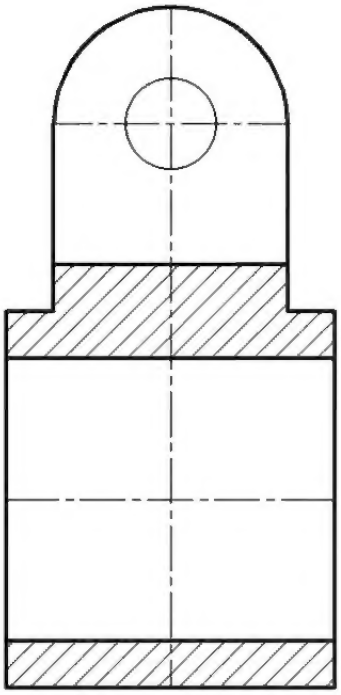

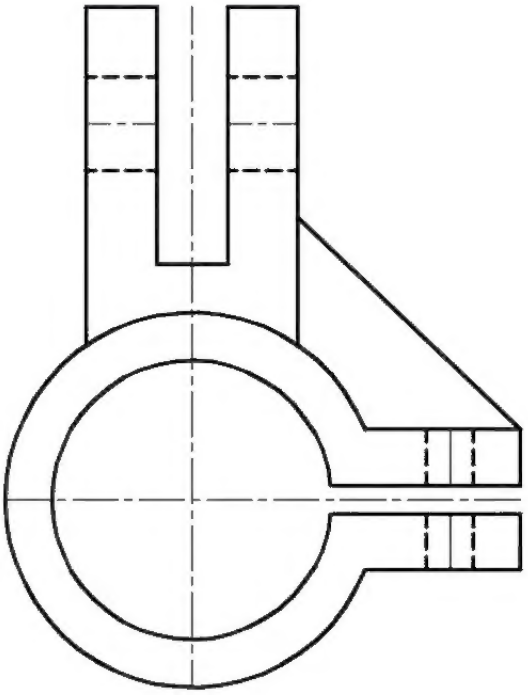

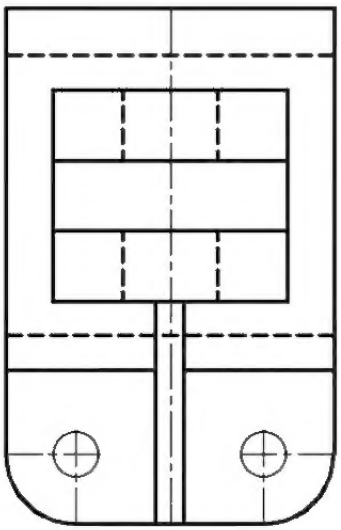

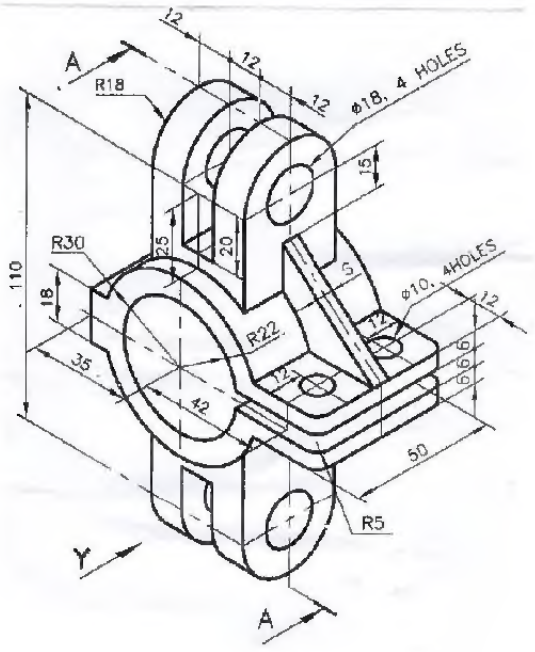
A
R18
12
12
12
ϕ18, 4 HOLES
15
R30
25
20
110
18
S
ϕ10, 4HOLES
12
R22
12
35
42
12
6
6
6
50
R5
Y
A

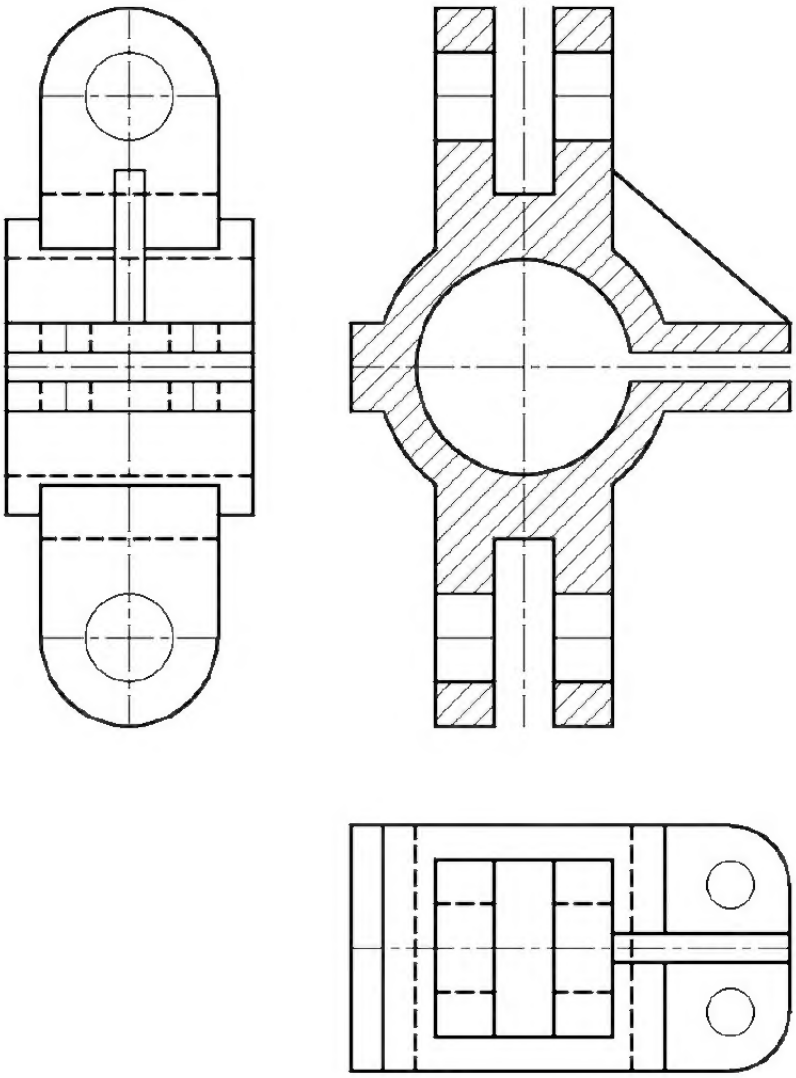

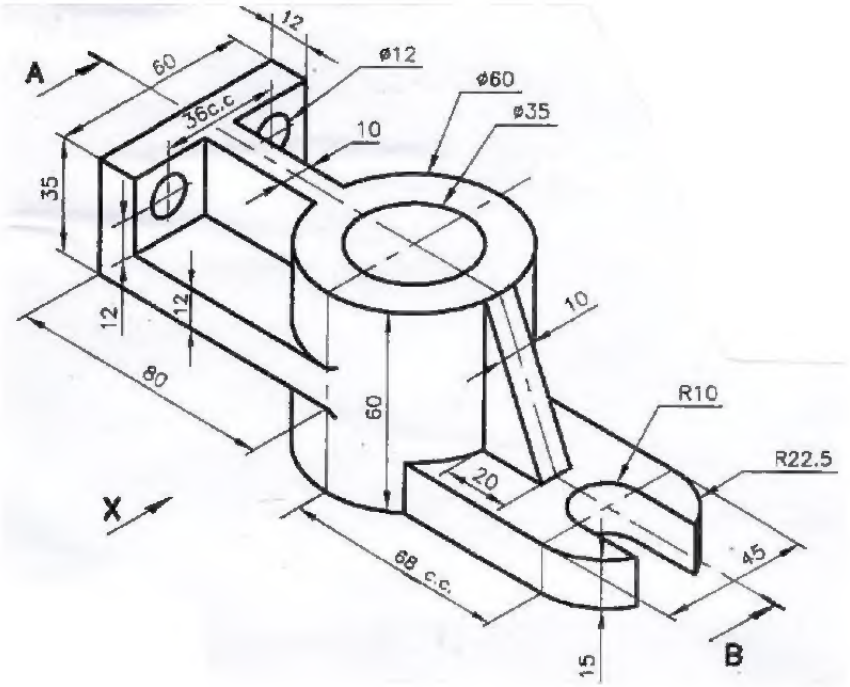
A
12
60
ø12
ø60
ø35
36c.c
10
35
12
12
80
60
10
R10
R22.5
20
X
68 c.c.
45
15
B

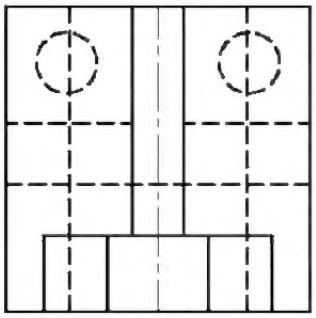

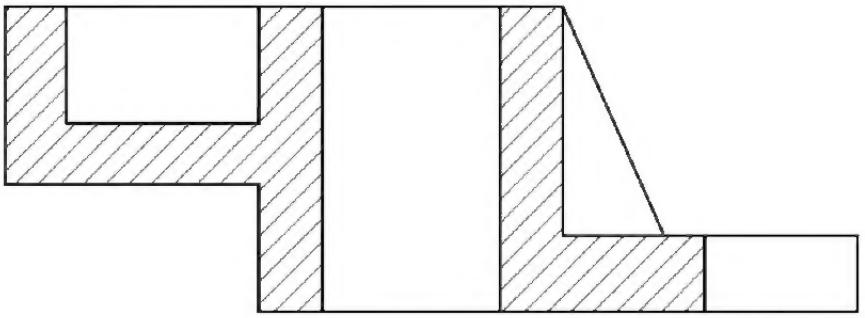

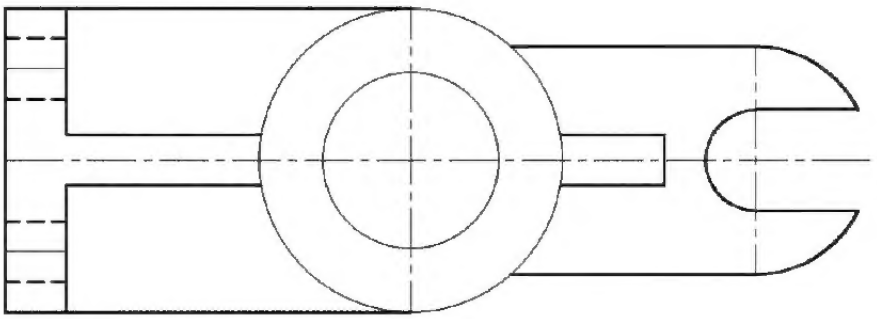

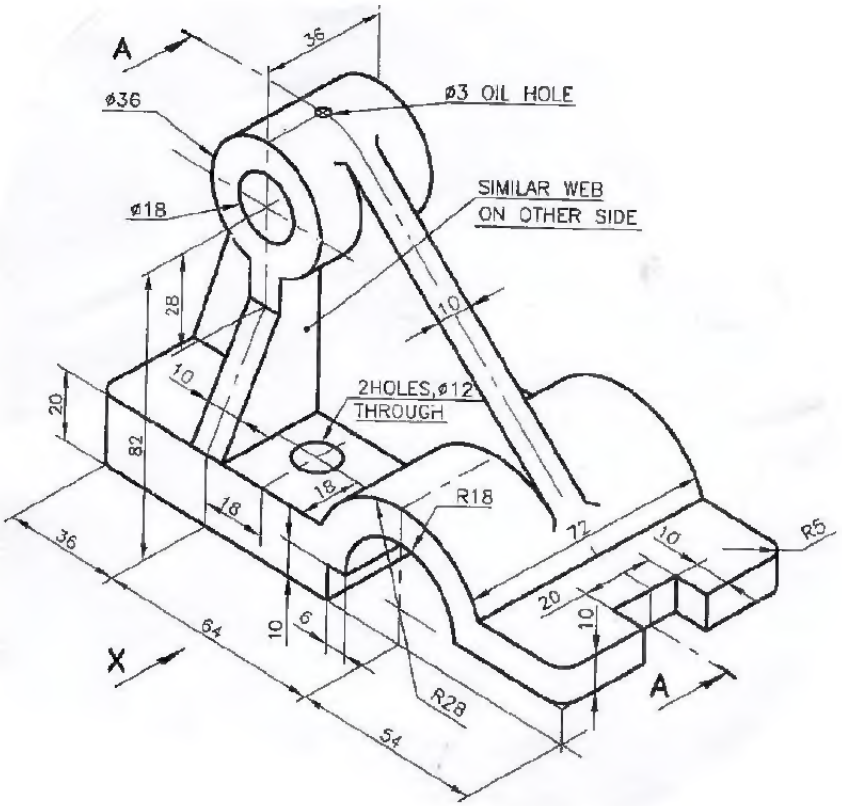
A
35
ø36
ø3 OIL HOLE
ø18
SIMILAR WEB
ON OTHER SIDE
28
10
10
20
2HOLES,ø12
THROUGH
82
18
18
R18
72
10
R5
36
64
10
6
20
10
X
A
R28
54

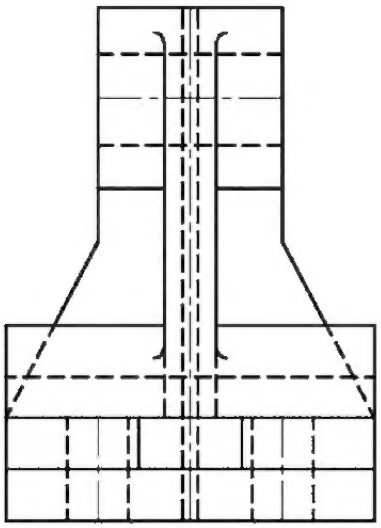

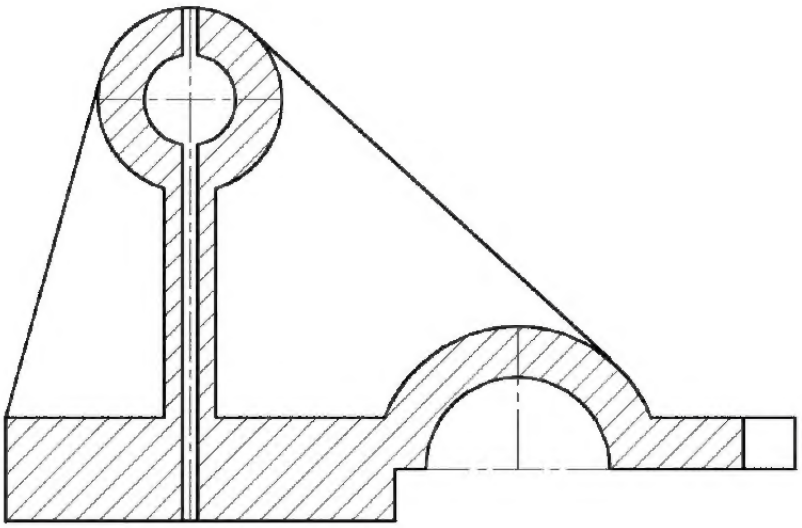

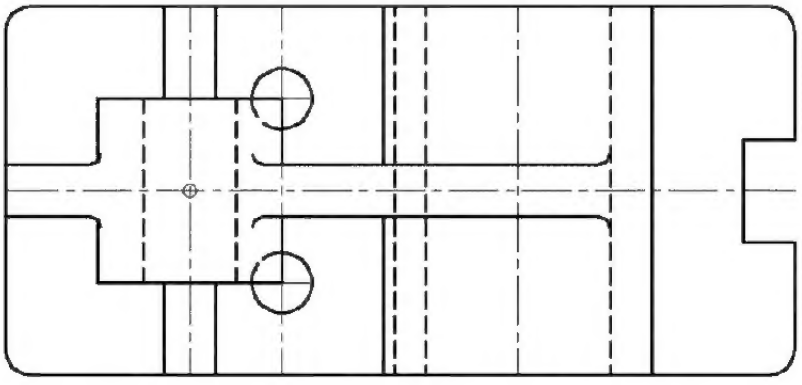

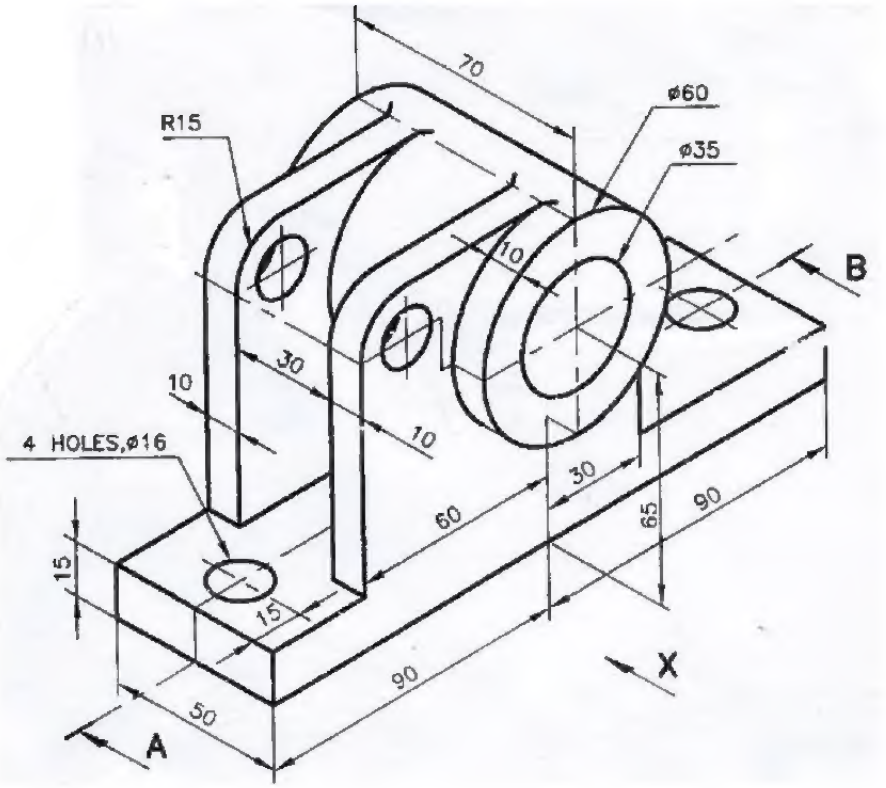
70
R15
ø60
ø35
B
10
30
10
10
4 HOLES,ø16
30
60
65
90
15
15
90
50
A
X

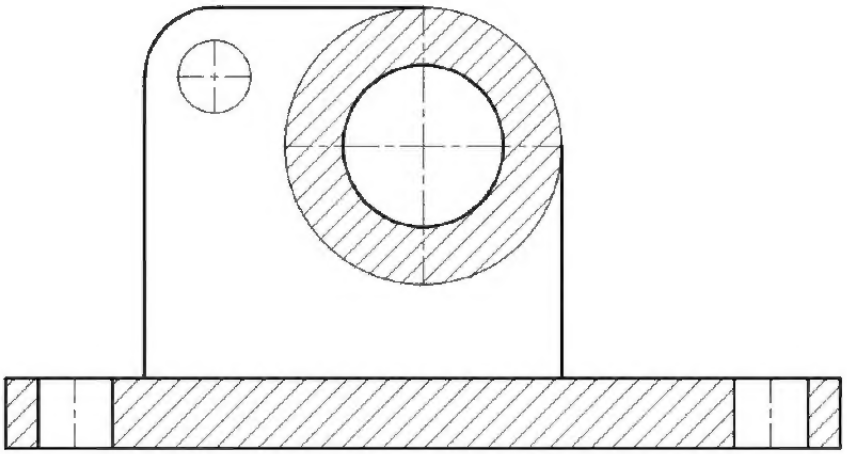

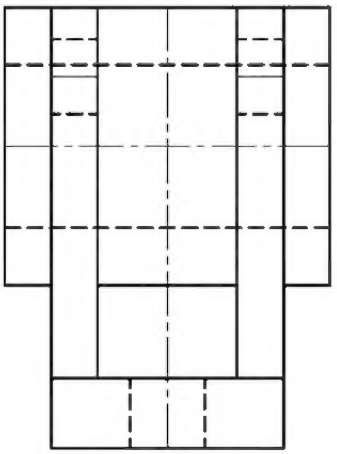

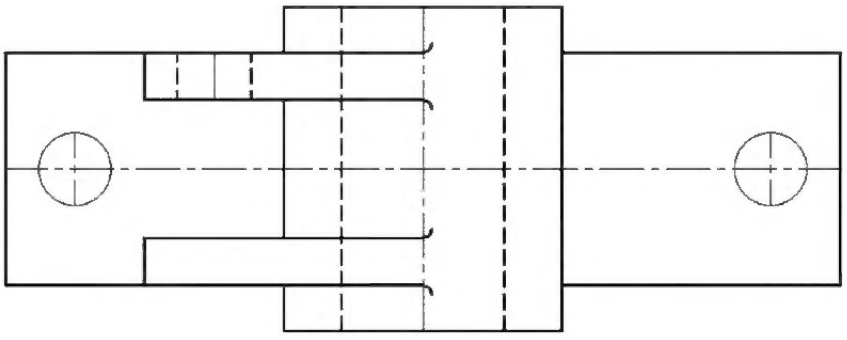

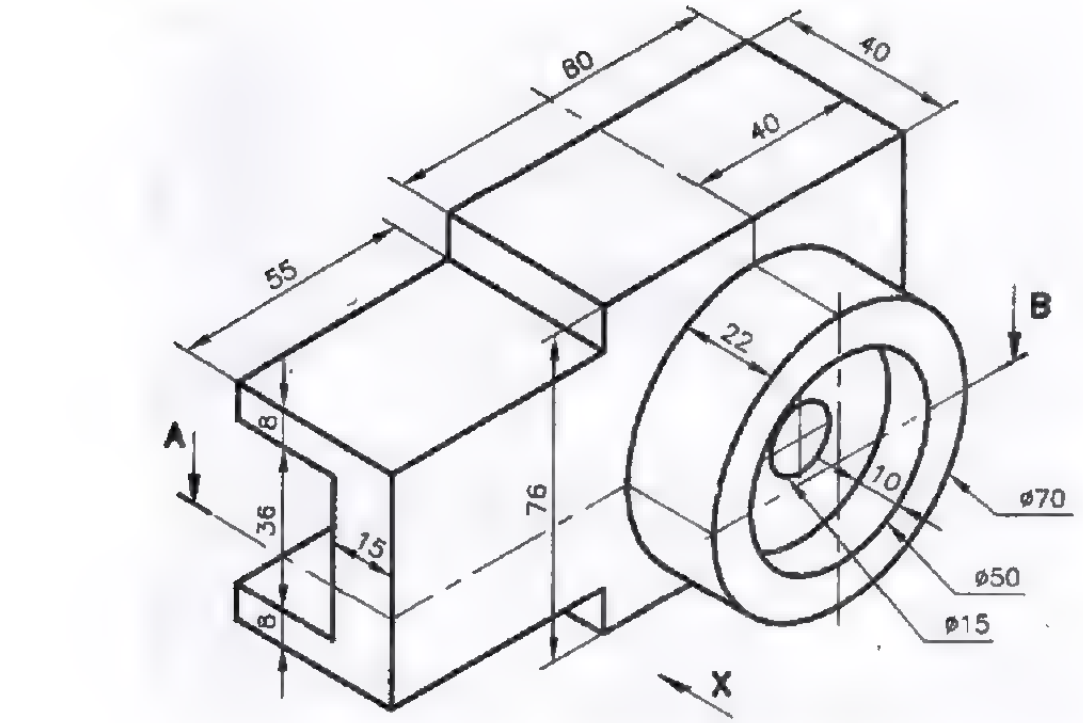
80
40
40
55
22
B
A
8
36
15
8
76
10
ø70
ø50
ø15
X

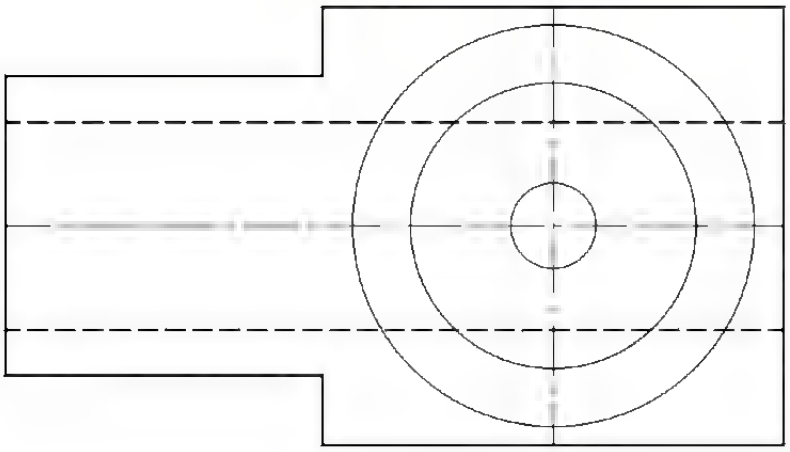

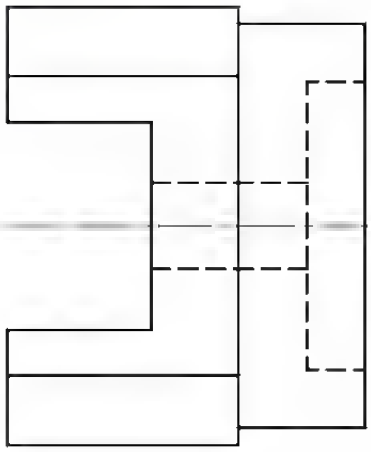

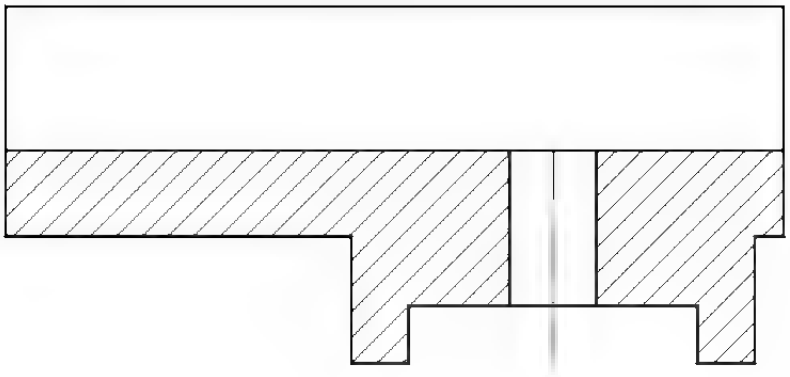

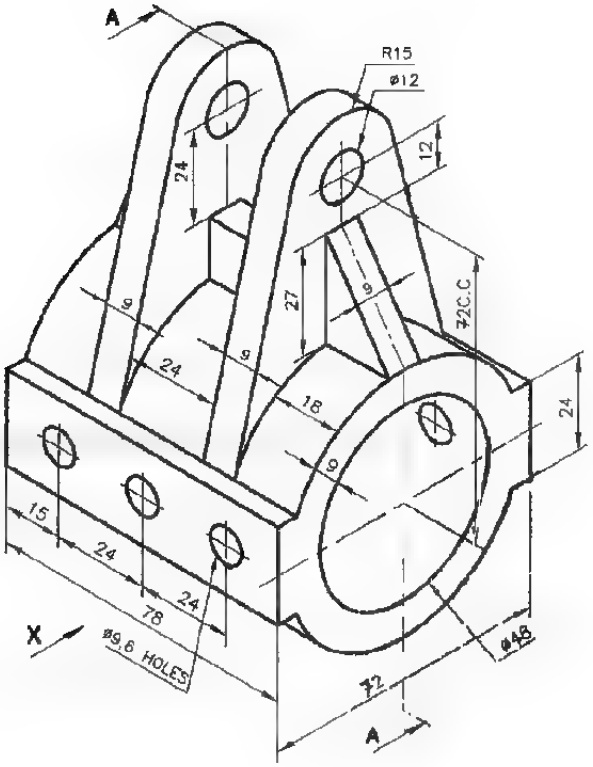
A
R15
ø12
12
24
27
9
72C.C
24
9
18
9
24
15
24
24
78
X
ø9,6 HOLES
ø48
72
A

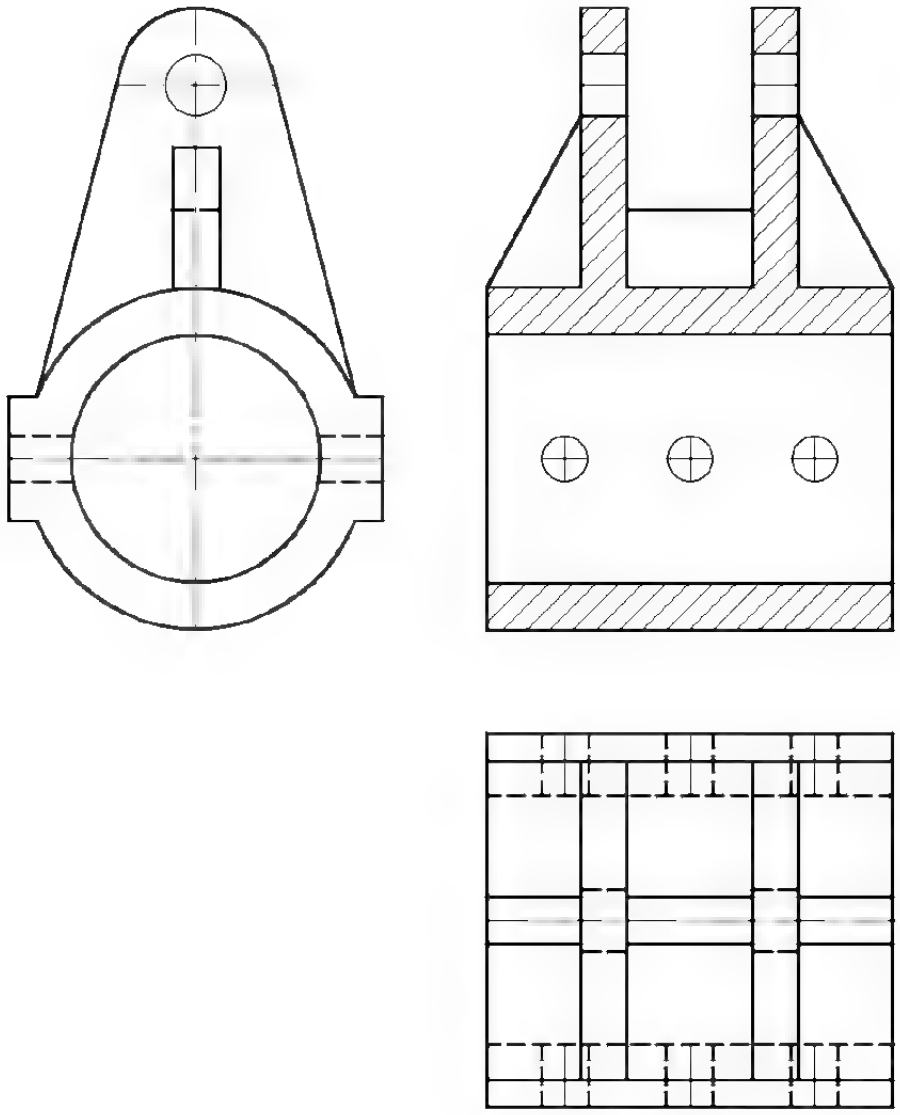

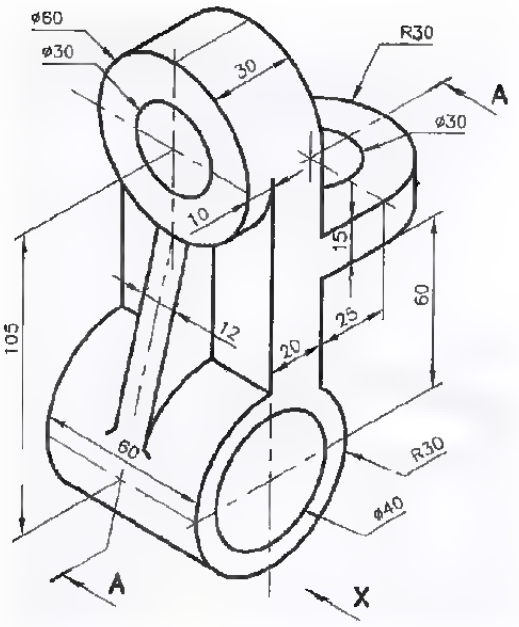
ø60
ø30
30
R30
A
ø30
10
15
60
105
12
25
20
60
R30
ø40
A
X

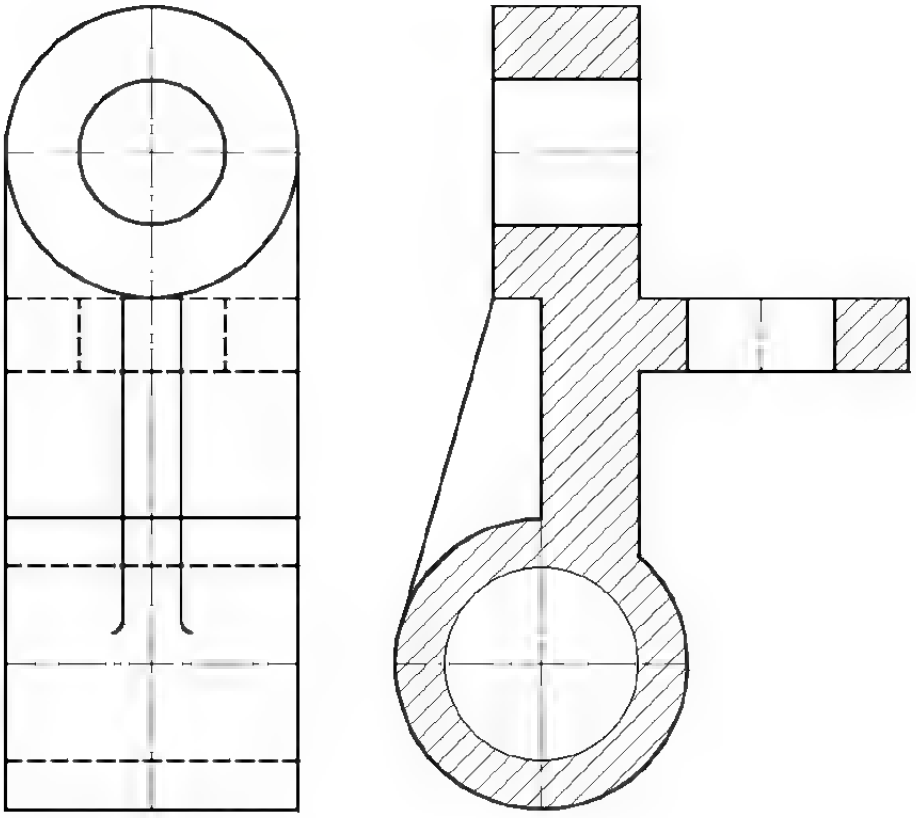

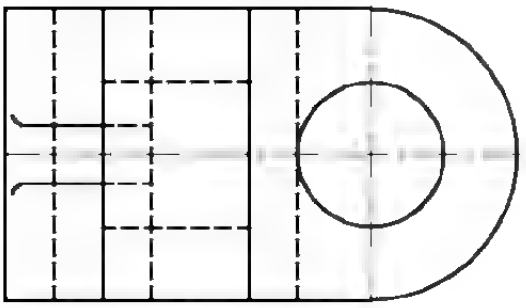

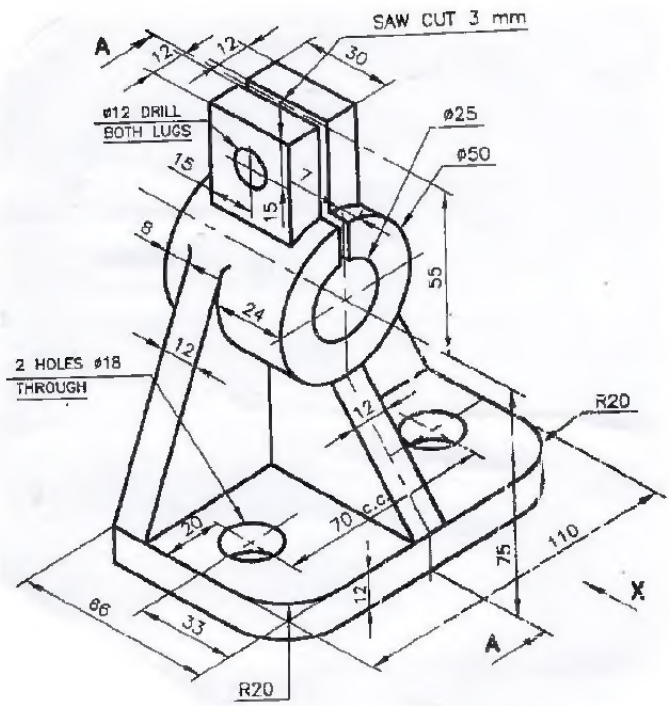
SAW CUT 3 mm
A
12
12
30
ø12 DRILL
BOTH LUGS
ø25
ø50
15
7
15
8
55
24
12
2 HOLES ø18
THROUGH
R20
12
20
70 c.c
75
110
X
12
86
33
A
R20

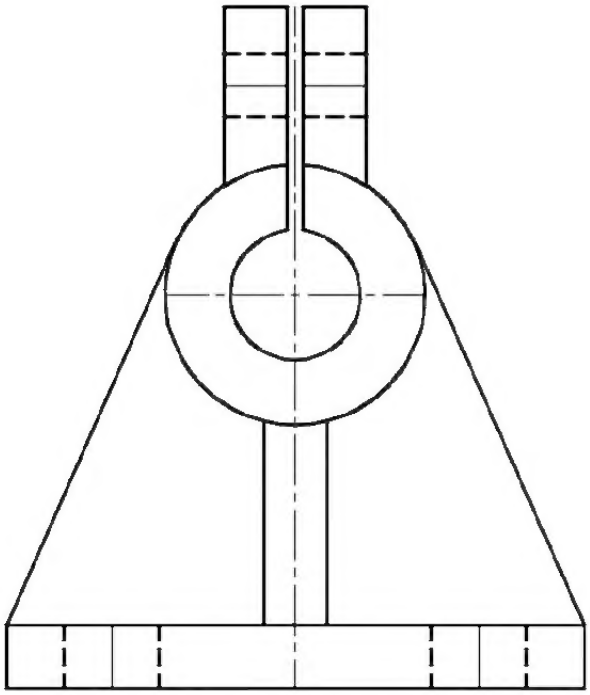

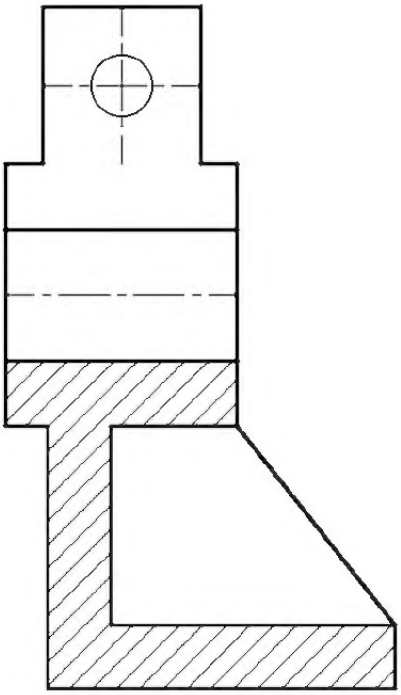

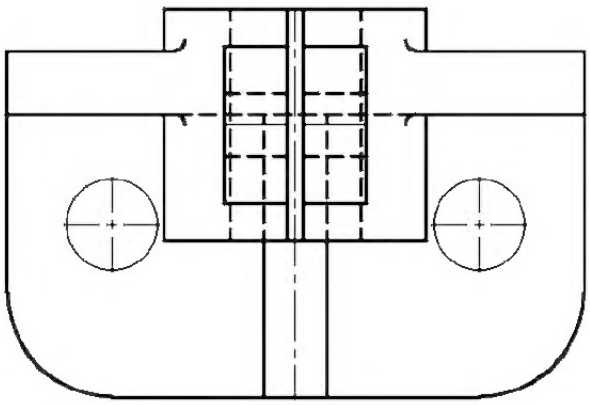

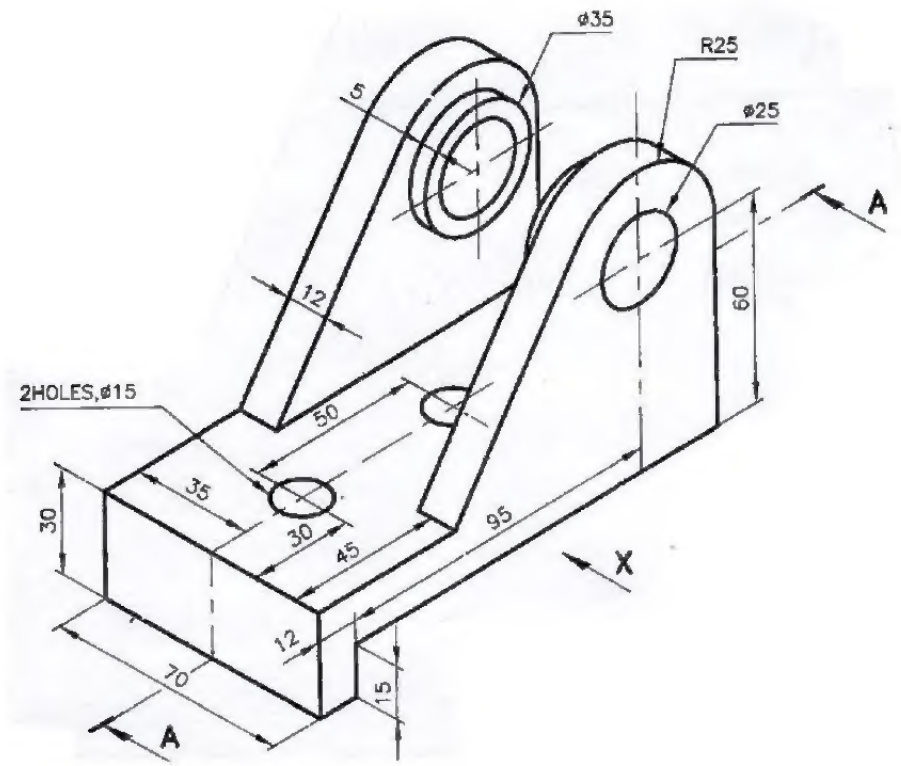
ø35
R25
ø25
5
12
60
A
2HOLES,ø15
50
35
30
45
95
X
30
12
70
15
A

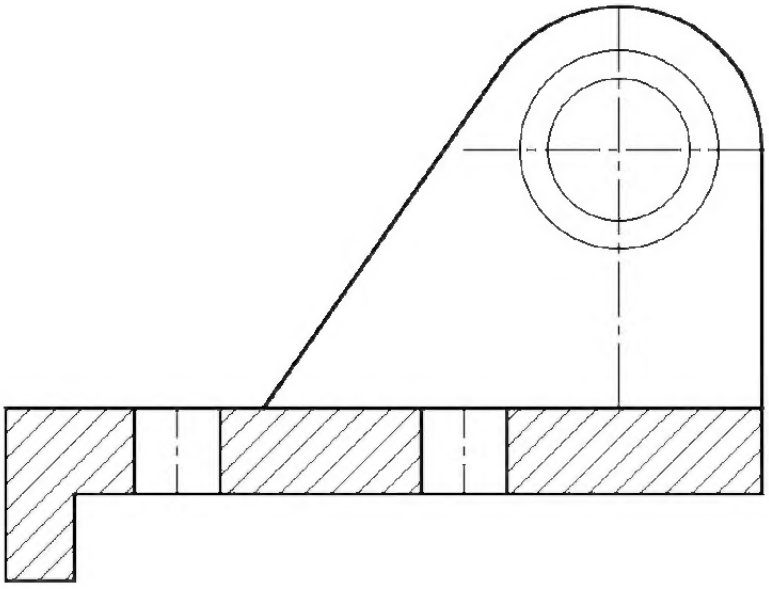

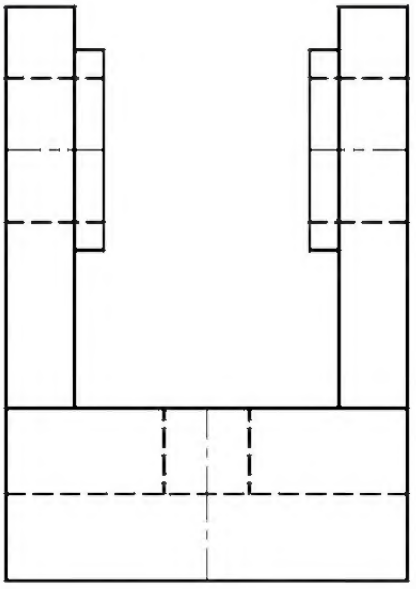

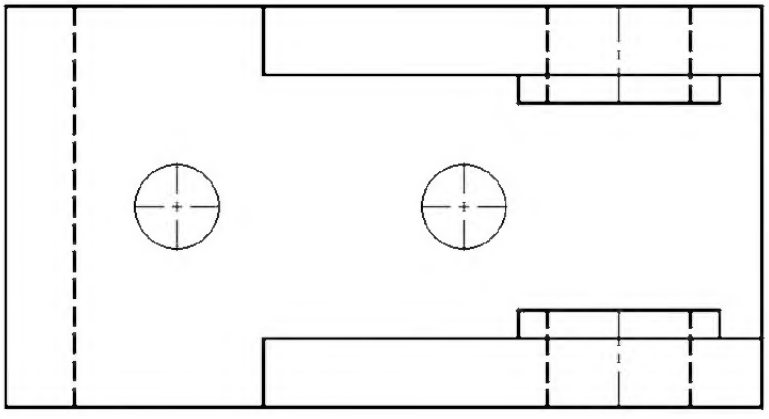

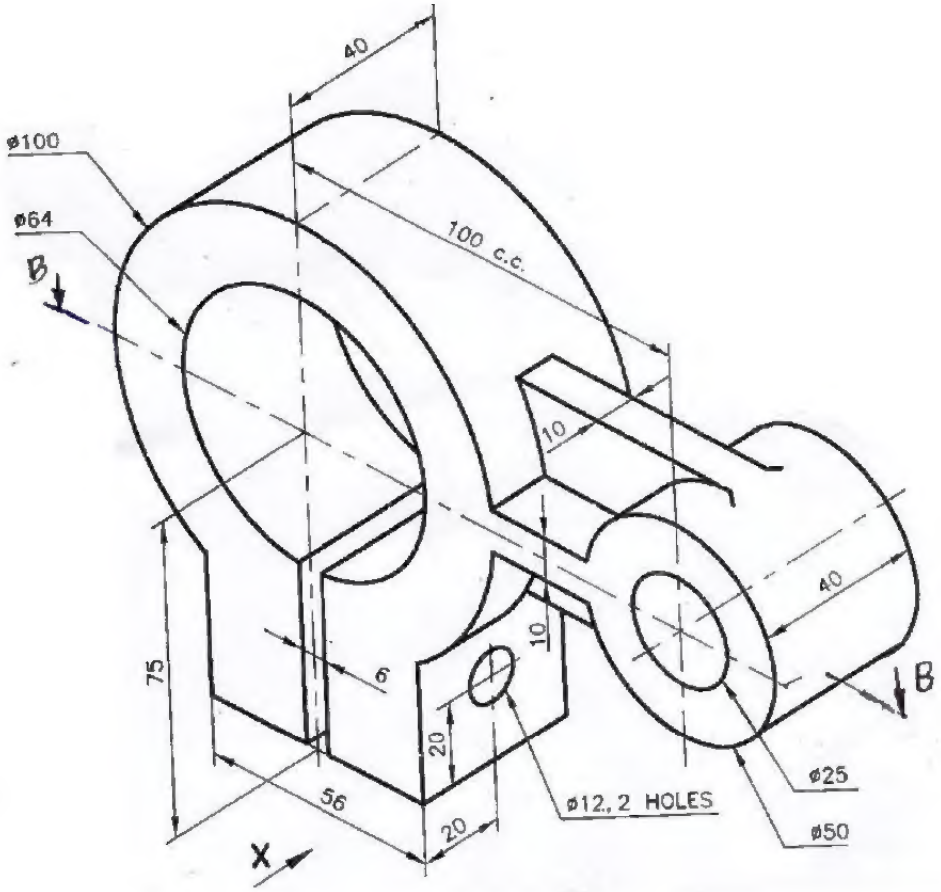
40
ø100
ø64
B
100 c.c.
10
40
10
75
6
20
56
20
X
ø12, 2 HOLES
ø25
ø50
B

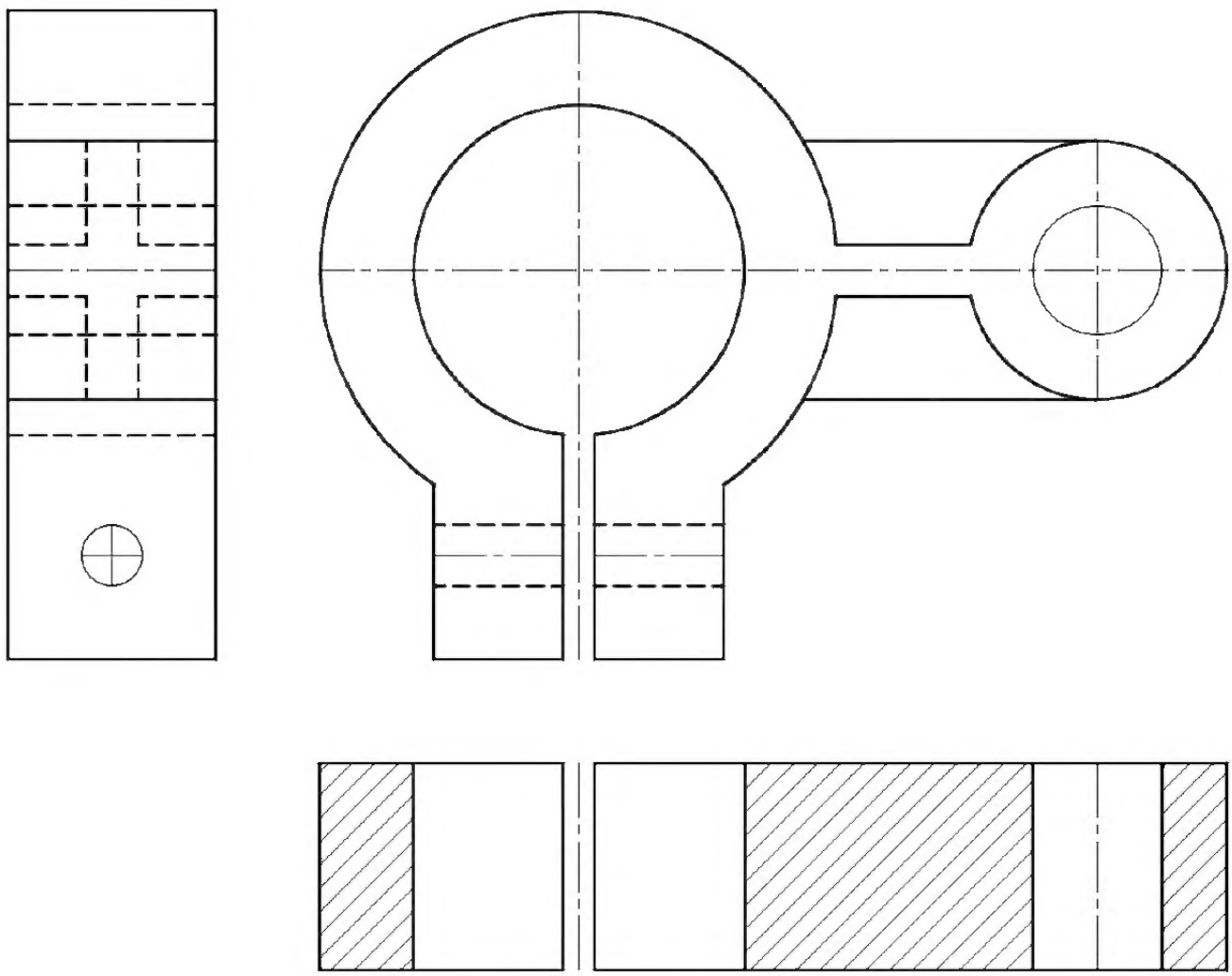

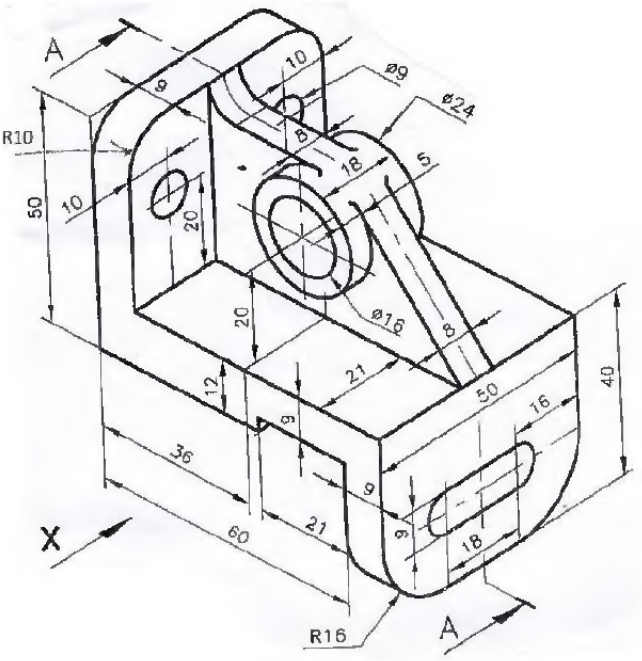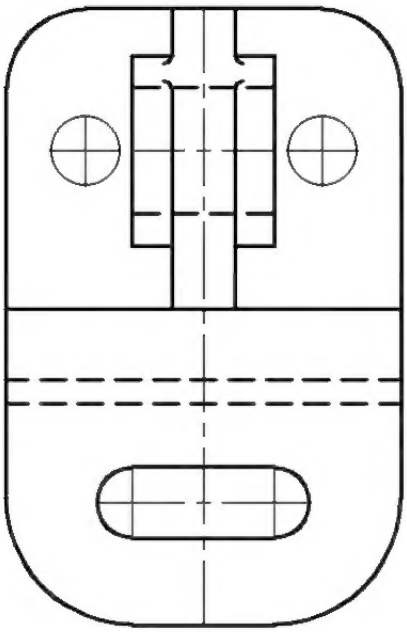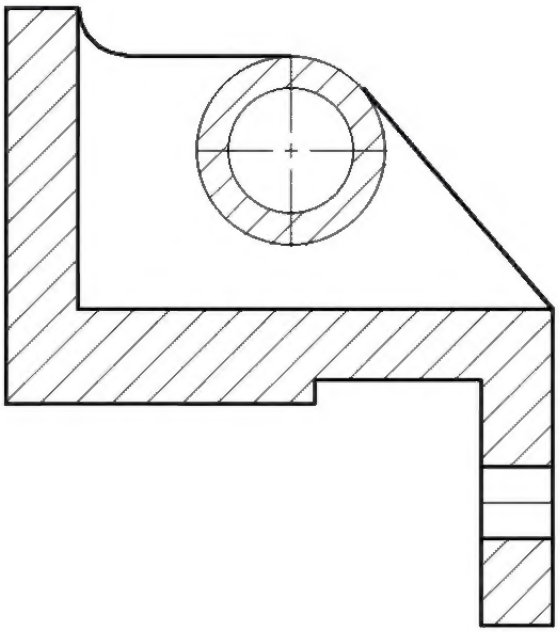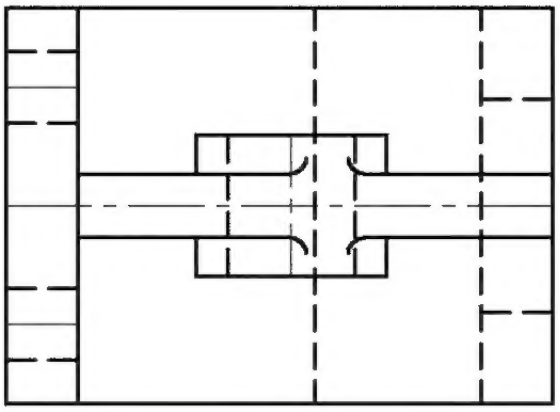
A
R10
50
10
9
20
10
ø9
ø24
8
18
5
20
ø16
8
21
12
9
36
60
21
9
9
18
50
16
40
X
R16
A